# Source Four® Zoom

# Assembly Guide

Production Dates: September 2004 - Present

**ATTENTION:** The part numbers listed in this guide may differ from the parts required for your particular Source Four fixture. Part numbers for fixtures change occasionally as parts are replaced or upgraded.

To ensure that you are ordering the proper part for your specific fixture, please contact your ETC dealer, or ETC Customer Service for assistance.

Copyright © 2007 Electronic Theatre Controls, Inc.
All Rights reserved.
Product information and specifications subject to change.
Part Number: **7060M2550-06.01** Rev A
Released: August 2007

# Table of Contents


15°-30° Basic Fixture . . . . . .1

25°-50° Basic Fixture . . . . . .2
Assembling Basic Fixture . . . . . .2

Lamp Socket Assembly . . . . . .3
Assemble lamp socket. . . . . .4

Reflector Housing Assembly . . . . . .7
Removing reflector. . . . . .7
Installing reflector. . . . . .8
. . . . . .8
Cleaning reflector. . . . . .8

Front Barrel Assembly . . . . . .9
Assemble front barrel assembly . . . . . .10

15°- 30° Lens Tube . . . . . .12
15°- 30° Lens tube assembly. . . . . .13
15°- 30° Gel frame endcap assembly . . . . . .13
15°- 30° Front lens assembly. . . . . .13
15°- 30° Rear lens assembly. . . . . .13

25°- 50° Lens Tube . . . . . .14
25°-50° lens tube assembly. . . . . .15
25°- 50° Gel frame endcap assembly . . . . . .15
25°- 50° Front lens assembly. . . . . .15
25°- 50° Rear lens assembly. . . . . .15
Assemble lens tube (15°-30° and 25°-50°) . . . . . .16
Cleaning glass lens . . . . . .17



ETC®, Emphasis®, Expression®, Insight™, Imagine™, Focus™, Express™, Unison®, Obsession® II, ETCNet2™, EDMX™, Source Four®, Revolution®, Sensor®, and WYSILink™ are either registered trademarks or trademarks of Electronic Theatre Controls, Inc. in the United States and other countries.

All other trademarks, both marked and not marked, are the property of their respective owners.

ETC intends this document, whether printed or electronic, to be provided in its entirety.

# 15°-30° Basic Fixture

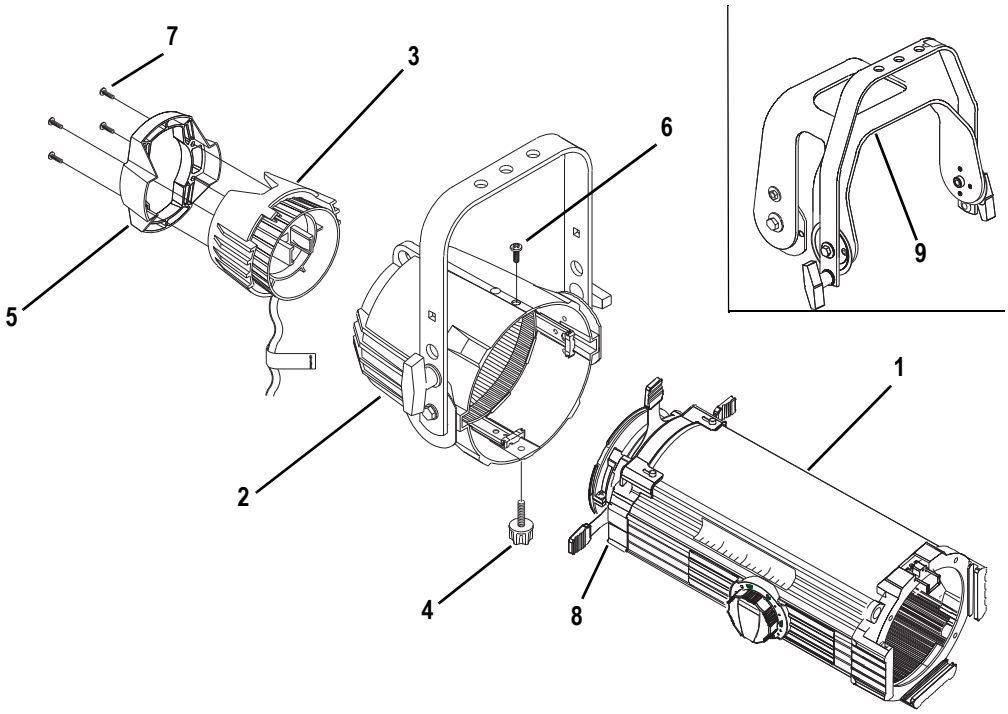


**Figure 1**

| Reference Number | Part Number | Description | Quantity Required |
|---|---|---|---|
| 1 | 7060A2030 | 15°-30° lens tube | 1 |
| 2 | 7060A2020 | Reflector housing assembly, double clutch | 1 |
| 3 | 7060A2008 | Lamp socket assembly | 1 |
| 4 | 7060A4008-01 | Knob set with male insert | 1 |
| 5 | 7060A4037 | Handle, insulated rear | 1 |
| 6 | HW5197 | Screw, 1/4-20 x 5/8, black zinc | 1 |
| 7 | HW2181 | Screw, 6-32 x 3/4, black Taptite | 4 |
| 8 | see page 9 | Front barrel assembly | |
| | **Optional** | | |
| 9 | 7060A2028 | Balance Yoke | 1 |

# 25°-50° Basic Fixture

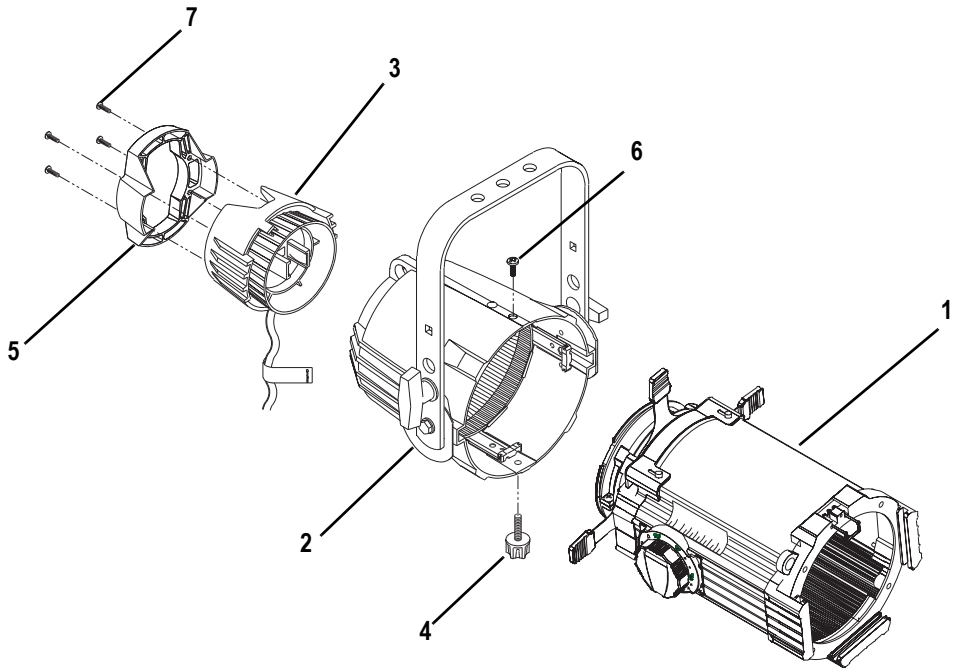


**Figure 2**

| Reference Number | Part Number | Description | Quantity Required |
|---|---|---|---|
| 1 | 7060A2032 | 25°-50° lens tube | 1 |
| 2 | 7060A2020 | Reflector housing assembly, double clutch | 1 |
| 3 | 7060A2008 | Lamp socket assembly | 1 |
| 4 | 7060A4008-01 | Knob set with male insert | 1 |
| 5 | 7060A4037 | Handle, insulated rear | 1 |
| 6 | HW5197 | Screw, 1/4-20 x 5/8, black zinc | 1 |
| 7 | HW2181 | Screw, 6-32 x 3/4, black Taptite | 4 |

## Assembling Basic Fixture

Step 1: Follow instructions under *Assemble lamp socket, page 4*.

Step 2: Follow instructions under *Installing reflector, page 8*.

Step 3: Follow instructions under *Assemble front barrel assembly, page 10*

Step 4: Follow instructions under *Assemble lens tube (15°-30° and 25°-50°), page 16*.

Step 5: Insert lens tube assembly (1) fully into the reflector housing assembly (2). Turn lens tube assembly 1/4 turn and align the two mounting holes. Secure with screw (6) on top, and knob (4) on bottom. Tighten both securely. See *Figure 1* or *Figure 2*.

Step 6: Install the lamp socket assembly (3) to the reflector housing (2) and secure with brass knurled screw on rear of lamp socket assembly.

Step 7: Release the gel retaining clip by pushing it sideways while gently pulling backwards.

Step 8: Insert the color frame.

Step 9: Lock the clip by pushing sideways while gently pushing it forward.

# Lamp Socket Assembly

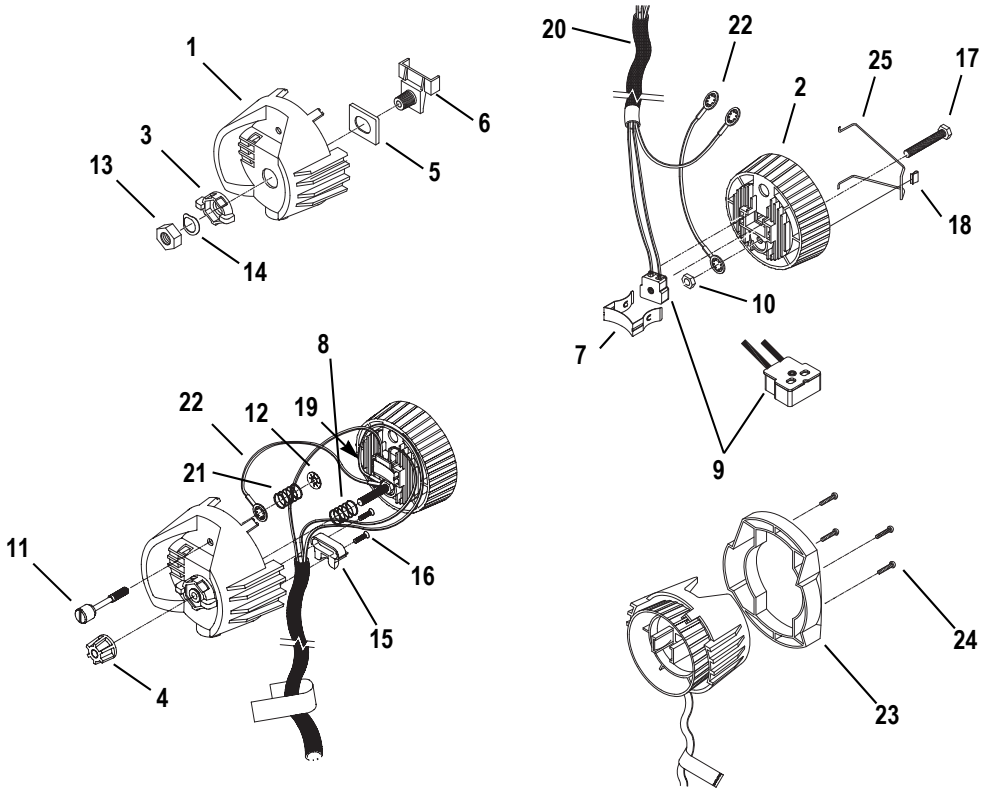


Figure 3

| Reference Number | Part Number | Description | Quantity Required |
|---|---|---|---|
| 1 | 7060A3055 | Housing, socket, casting, painted | 1 |
| 2 | 7060A3007 | Socket, light baffle casting, raw | 1 |
| 3 | 7060A4007 | Knob, X-Y, lamp set | 1 |
| 4 | 7060A4008-02 | Knob, Z, lamp set w/female insert | 1 |
| 5 | 7060A4011 | Bushing, cup | 1 |
| 6 | 7060A3011 | Hub, index, casting | 1 |
| 7 | 7060A3012 | Spring, lamp retainer | 1 |
| 8 | HW748 | Spring, compression | 1 |
| 9 | 7060B7019 | Complete UL socket assembly | 1 |
| 10 | HW534 | Nut, hex, 1/4-20, black zinc | 1 |
| 11 | 7060A3025 | Screw, 1/4-20 knurled head | 1 |
| 12 | HW746 | Retaining ring, flat, Southco | 1 |
| 13 | HW5123 | Nut, hex, 9/16-18, black zinc | 1 |
| 14 | HW747 | Washer, wave | 1 |
| 15 | 7060A3056 | Clamp, strain relief, painted | 1 |
| 16 | HW3103 | Screw, 8-32 x 5/8 PhFHMS, black zinc | 2 |
| 17 | HW5122 | Bolt, 1/4-20 x 1.75, full thread, black zinc | 1 |
| 18 | HW8209 | Clip Tinnerman | 1 |
| 19 | 7060B7003 | 48" W420 wire, 16 gauge, 200° C/300V, green UL 1180/CSA AWM with lug J490T installed | 1 |
| 20 | W6195 | 36" sleeve, fiberglass | 1 |
| 21 | HW749 | Spring, ground | 1 |
| 22 | 7060B7007 | 4" W420 wire, 16 gauge, 200° C/300V, green, UL 1180/CSA AWM with two J490T lugs installed | 1 |
| 23 | 7060A4037 | Handle, insulated rear, black | 1 |
| 24 | HW2181 | Screw, 6-32 x 3/4, Taptite | 4 |
| 25 | 7060A3085 | Source Four Lamp Retainer Wire | 1 |

## Assemble lamp socket

Tools Required:

- Open-end adjustable wrench or a 7/16” socket
- Needle-nose pliers
- #2 Phillips screwdriver

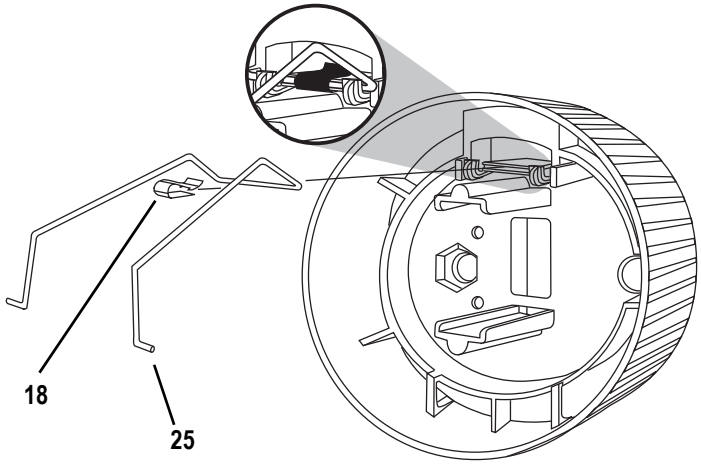


**Figure 4**

Step 10: Set the crossbar of the retainer clip (25) under the two hooks on the clip bracket as shown in *Figure 4*.

Step 11: Place the Tinnerman clip (18) over the retainer clip crossbar between the two hooks and press it down firmly until it snaps into place.

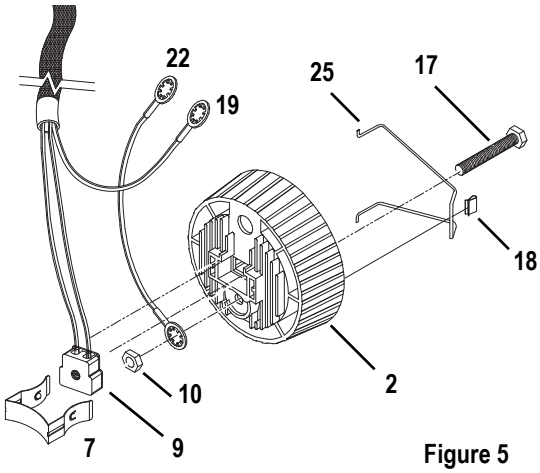


**Figure 5**

Step 12: Insert the bolt (17) through the light baffle socket casting (2). See *Figure 5*.

Step 13: Install the green ground wire assemblies (19 and 22) on the bolt (17) with the prongs on the crimped connectors toward the casting. Run both wires through the indent in the lip around the bolt hole. Secure with nut (10) and tighten securely (60 inch pounds).

Step 14: Place the socket assembly (9) into the light baffle socket casting (2). Be sure it is well seated.

Step 15: Install the lamp retainer spring (7). The lamp retainer spring secures the socket. Insert the spring one end at a time, making sure the rectangular slot in each side of the spring seats on the corresponding tab in the casting.

**Note:** *If the spring does not seat correctly, coax it into place with a screwdriver or needle-nose pliers.*

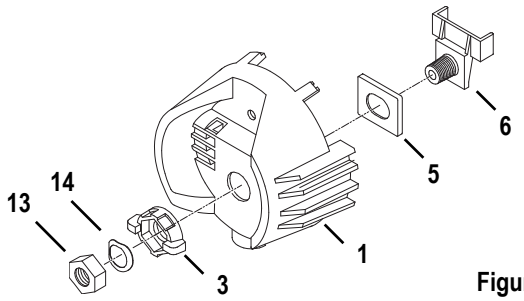


**Figure 6**

Step 16: Install the bushing cup (5) into the housing socket casting (1) as shown in *Figure 6*. The cup should slide smoothly up and down, but not side to side.

Step 17: Insert the threaded end of the index hub (6) through the holes in the bushing cup and the back of the housing socket casting (1).

Step 18: Slide the X-Y knob (3) over the exposed index hub bolt (6), then insert the wave washer (14) on the bolt and secure with the 9/16 hex nut (13). Hand tighten the X-Y knob (3).

**Note:** *Install the wave washer with the upward curve toward the hex nut.*

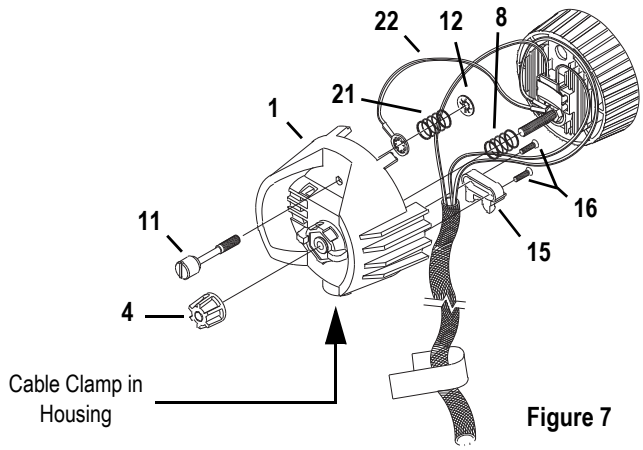


**Figure 7**

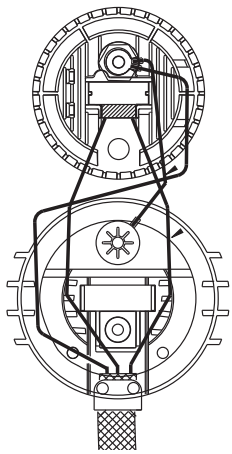

**Figure 8**

Step 19: Insert the knurled head screw (11) through the housing socket casting (1) as shown in *Figure 7*.

Step 20: Install the shorter green ground wire (22) onto the screw. The prongs on the crimped connector should be toward the casting.

Step 21: Install the ground spring (21) onto the screw and secure it with the Southco flat retaining ring (12). Install the Southco ring with its prongs away from the casting.

**Note:** *Use pliers to straighten the Southco retaining ring (12) if it bends when you install it on the bolt.*

Step 22: Lay the leads in the bottom half of the cable clamp (located in the housing socket casting [1]), making sure that the fiberglass sleeving extends slightly past the screw holes in the housing socket casting. Install new sleeving if necessary. Then, route the wires as shown in *Figure 8*.

**CAUTION:** *You must follow the wire routing diagram to ensure that the socket leads do not interfere with the lamp focus mechanism.*

Step 23: Install the top half of the cable clamp (15) and secure it with the two screws (16). Tighten the screws alternately to ensure a solid connection.

**Note:** *To ensure that the clamp holds the cable tightly, flatten the cable, then fold over the sleeving before you install the top half of the clamp. Make sure the top edge of the cable clamp is even with the edge of the socket to prevent interference with lamp focus movement. Make sure sleeving is not pinched.*

Step 24: Using the four screws (24), attach the handle (23) to the lamp socket assembly. See *Figure 3*.

Step 25: Place the compression spring (8) on the protrusion on the inside of the index hub (6).

Step 26: Insert bolt (17) through spring (8) and through the index hub (6) of the housing socket (1), joining the two castings. Make sure wires are not pinched between the two pieces.

Step 27: Before proceeding, check again to make sure the wires are still positioned as indicated in Figure 6. Adjust if necessary.

Step 28: Press the two castings together firmly so the bottom of the light baffle (2) sits on top of the cable clamp (15), then install the X-Y lampset (3) and Z lamp knob (4). Hand tighten the knob all the way to the right.

**CAUTION:** *You must install Z knob as described above to ensure proper lamp focus travel.*

# Reflector Housing Assembly

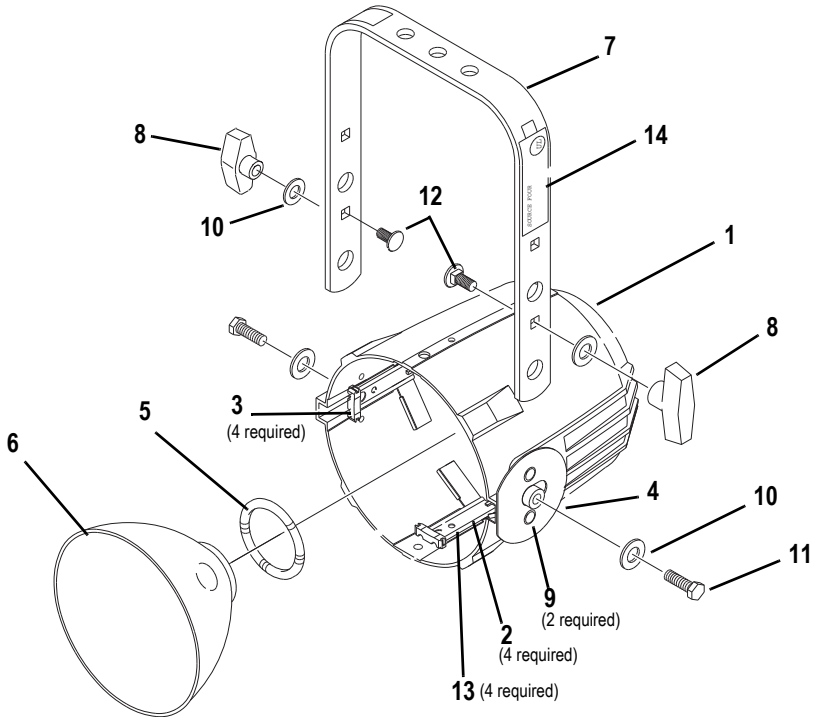


**Figure 9**

| Reference Number | Part Number | Description | Quantity Required |
|---|---|---|---|
| 1 | 7060A3054 | Housing, reflector casting, painted black | 1 |
| 2 | 7060A3006 | Clip, reflector retainer | 4 |
| 3 | 7060A4010 | Bushing, gate | 4 |
| 4 | 7060A3016 | Plate, clutch | 1 |
| 5 | 7060A3019 | Spring, reflector support | 1 |
| 6 | 7060A4015 | Reflector, molded glass, coated | 1 |
| 7 | 7060A3058 | Bracket, yoke, painted | 1 |
| 8 | HW8144 | Handle, yoke knob, 5/16 - 18 | 2 |
| 9 | HW753 | Rivet, machine, 3/16 x.720, flat head, black zinc | 2 |
| 10 | HW5126 | Washer, flat, 5/16, black zinc | 4 |
| 11 | HW5193 | Bolt 5/16-18 x 3/4, black zinc | 2 |
| 12 | HW5125 | Bolt, carriage, 5/16-18 x.75, black zinc | 2 |
| 13 | HW752 | Rivet machine, 3/16 x 5/16, black zinc | 4 |
| 14 | 7060A4088 | Label, S4 750w UL | 1 |

## Removing reflector

Tools Required:

- Minimally padded work surface (cardboard, carpet, or rubber mat recommended)

**WARNING:** ***This procedure may crack or break the reflector. Always wear gloves, safety glasses, and a dust mask when performing this procedure.***

Step 1: Place the reflector housing face down on your work surface so that the concave reflector surface points downward.

Step 2: Loosen the clutch and rotate the yoke so that it is perpendicular to the housing at roughly a 90° angle. Tighten the clutch.

Step 3: Using the yoke as your handle, raise the housing assembly off of the work surface a few inches and then firmly tap the housing on the work surface. This should force the reflector out of its clips.

Step 4: Carefully lift the housing to see if the reflector is released. If it is not, repeat step 3 with slightly more force.

## Installing reflector

**Note:** *The following assumes all four reflector retainer clips (2) have already been riveted to the reflector housing casting (1) and the gate bushings (3) installed on the retainer clips. See Figure 9.*

Step 1: Place the reflector housing casting (1) on a flat work surface with the large opening facing up.

Step 2: Install the reflector support spring (5) in the circular opening at the base of the casting.

Step 3: Insert the reflector (6) at an angle, under any three adjacent legs of the reflector's clips.

Step 4: Gently press down on the opposite side of the reflector until it snaps into place under the remaining clips.

**Note:** *If the reflector does not snap in, turn the casting over. Gently pull on the side of the reflector that has not snapped in until the rest of the reflector slides into place.*

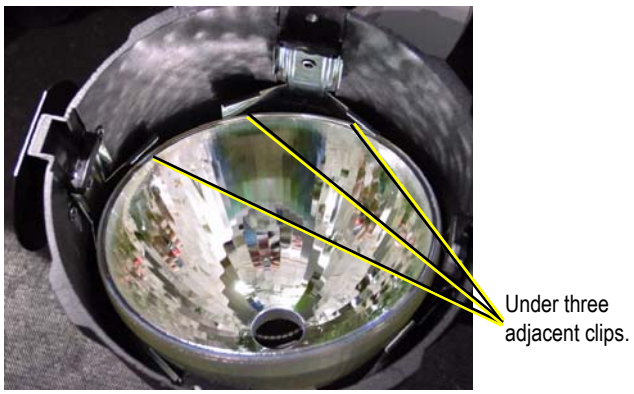


Step 3

Step 4

## Cleaning reflector

**WARNING:** ***Do not use ammonia-based or other harsh commercial cleaners. Clean reflector only as directed.***

***Commercially available glass cleaning agents should be avoided as they may contain ammonia, other harsh chemical detergents or abrasive agents. These cleaners may damage the glass surface and the Anti-Reflective coatings. Do not immerse or soak the glass in any cleaning solution.***

Remove dust with a blast of oil-free air or wipe with a clean, lint-free cloth. Isopropyl alcohol, distilled water or a 50%-50% mixture of each can be used to clean the glass surface.

# Front Barrel Assembly

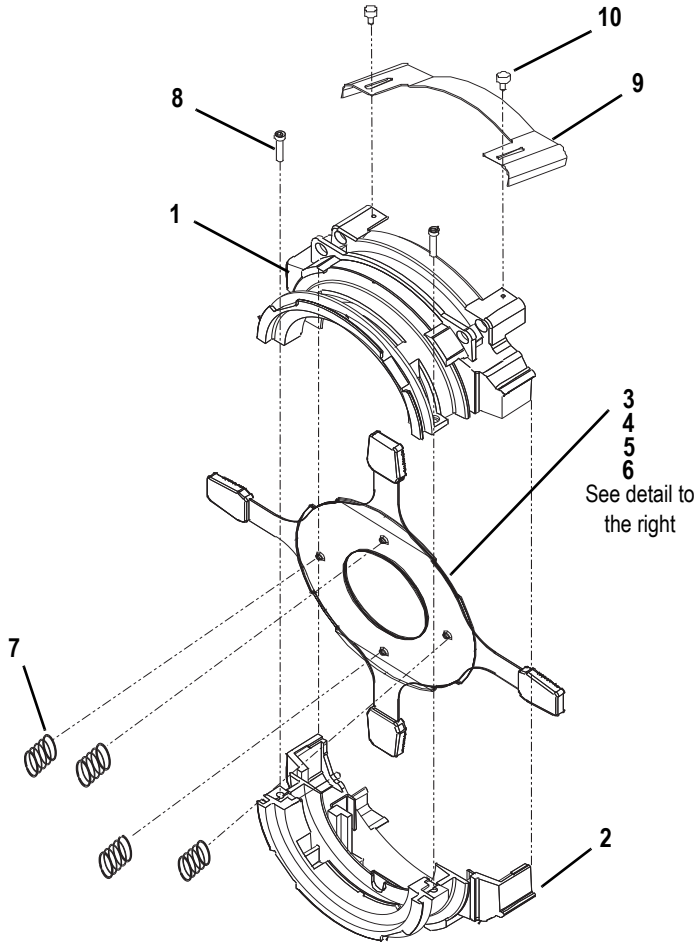


**Figure 10**

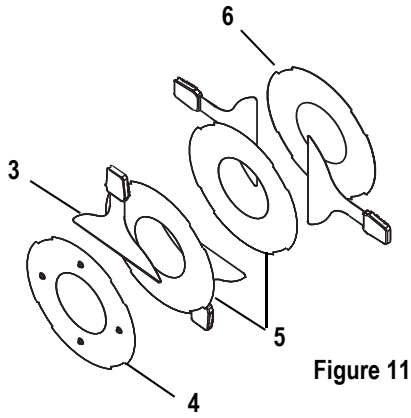


**Figure 11**

**Shutter Assembly:** The bottom divider plate (4) has four dimples punched into the surface; the top plate (6) has none. The middle divider plates (5) are noticeably thinner-gauge metal than the other two.

| Reference Number | Part Number | Description | Quantity Required |
|---|---|---|---|
| 1 | 7060A3112 | Front barrel, top casting, painted | 1 |
| 2 | 7060A3113 | Front barrel, bottom casting, painted | 1 |
| 3 | 7060A2025 | Shutter blade assembly, 22 gauge | 4 |
| 4 | 7060A3001-01 | Plate, divider with dimples (bottom) | 1 |
| 5 | 7060A3003 | Plate, gate (middle) | 1 |
| 6 | 7060A3001-02 | Plate, divider (top) | 1 |
| 7 | HW754 | Shutter spring | 4 |
| 8 | HW3154 | Screw, 8-32 x 5/8, PhPH, taptite, black zinc | 2 |
| 9 | 7060A3099 | Cover, iris slot | 1 |
| 10 | HW2177 | Thumb Screw, 8-32 x 1/4, black zinc | 2 |

## Assemble front barrel assembly

Tools Required:

- #2 Phillips head screwdriver

**WARNING:** ***During assembly, the shutter springs can pop out of place. Always wear protective eyewear during this procedure.***

Step 1: See *Figure 10*. Stand the top and bottom front barrel castings (1 and 2) upright with the shutter end of the castings toward the bottom.

**Note:** *The top front barrel casting (1) contains the iris slot.*

Step 2: Slide the bottom divider plate (4) into its place in the bottom casting (2). The dimples on the divider plate must point down.

**Note:** *The bottom divider plate (4) has four dimples punched into the surface; the top plate (6) has none. The middle divider plates (5) are noticeably thinner-gauge metal than the other two.*

*The notches on the divider plates must fit against the flanges in the casting so the plates do not move.*

**WARNING:** ***Divider plate edges are sharp. Handle with caution.***

Step 3: With the bottom barrel casting (2) to your left, place one shutter blade (3) on top of dimpled divider plate (4) handle facing outward, up and down. (See *Figure 11*).

**Note:** *Install shutter blades with the rounded side facing up toward the front of the casting.*

Step 4: Place the middle gate plate (5) on top of the shutter blade.

Step 5: Place another shutter blade (3) on top of the divider plate and then place the other divider plate on top.

Step 6: Place the two shutter blades on top of the divider. Pull the blade and plate assembly slightly forward to allow the handle to slip through the slot in the bottom casting.

Step 7: Place the top divider plate (6) on top of the two shutter blades.

**Note:** *Make sure no shutter assembly components are under the pattern holder guides.*

Step 8: With both front barrel castings still standing upright, join the two halves, sliding the handle of the top shutter blade through the slot in the top front barrel casting (1).

Step 9: Connect the halves of the gate assembly using two PHMS screws (8). Hand tighten only (25 inch pounds).

**Note:** *The tops of the two front barrel castings must be even. Adjust as necessary before completely tightening the screws. Failure to do this could interfere with the barrel rotation.*

Step 10: Turn the front barrel assembly over so that the narrower end is on your work surface.

Step 11: Install the four shutter springs (7) between the four dimples in the shutter plate and the tabs in the lip of the casting.

**Note:** *Install the springs at the joints in the castings on either of the tabs at the joint.*

Step 12: Place iris slot cover (9) over the iris slot. Use two screws (10) to secure the cover.

# 15°- 30° Lens Tube

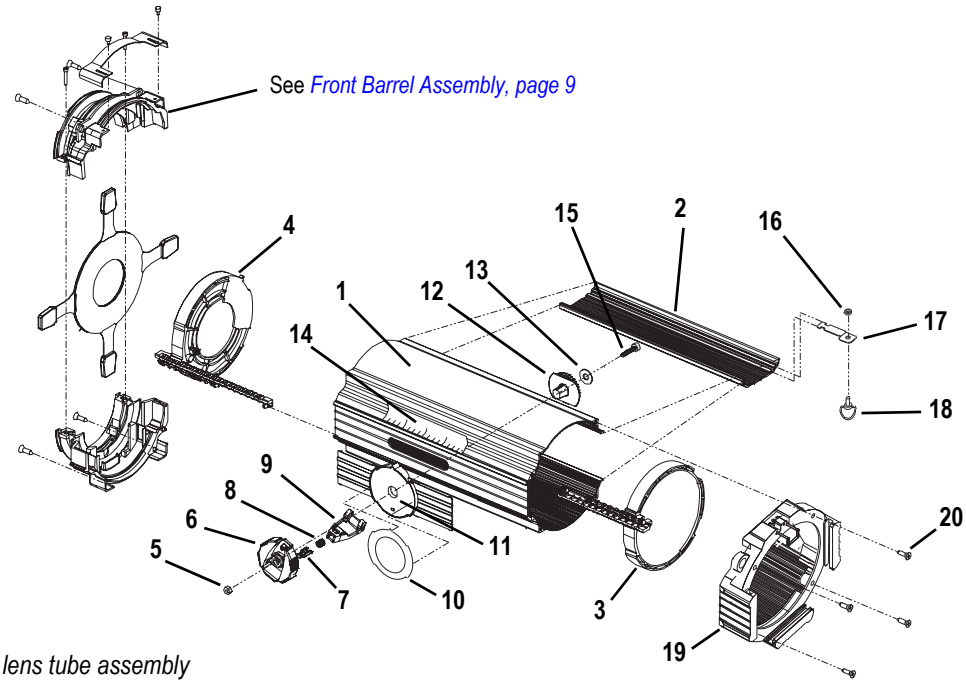


*15°-30° lens tube assembly*

**Figure 12**

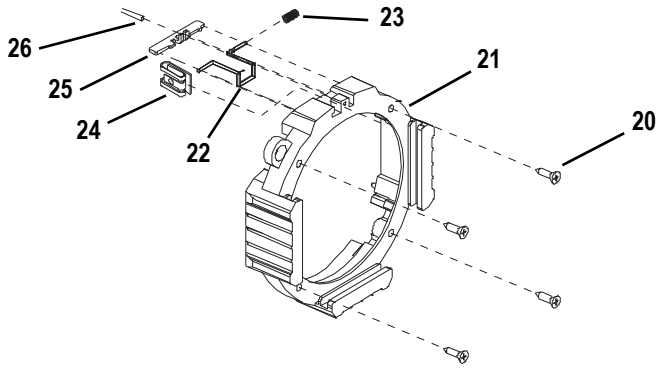


*15°-30° Gel frame endcap assembly*

**Figure 13**

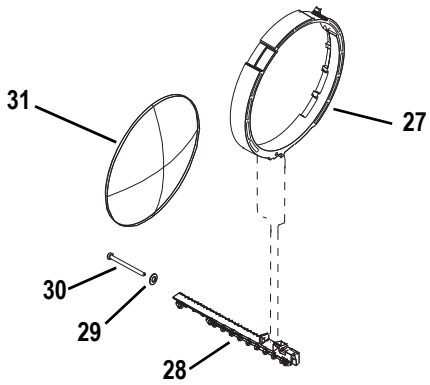


*15°-30° Front lens assembly*

**Figure 14**

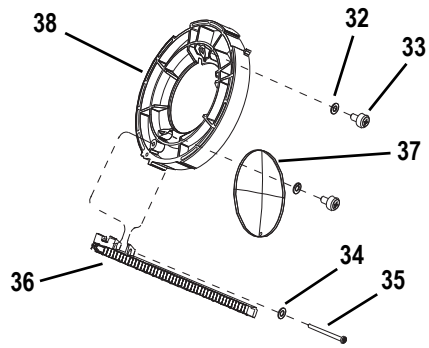


*15°-30° Rear lens assembly*

**Figure 15**

## 15°- 30° Lens tube assembly

| Reference Number | Part Number | Description | Quantity Required |
|---|---|---|---|
| 1 | 7060A2030 | 15°-30° lens tube | 1 |
| 2 | 7060A3139-01 | Extrusion door | 1 |
| 3 | See below | Front lens assembly | 1 |
| 4 | See below | Rear lens assembly | 1 |
| 5 | HW5218 | Nut, 1/4-20 metal lock Lowpro | 1 |
| 6 | 7060A4056 | Dial adjustment | 1 |
| 7 | 7060A4066 | Button, push, CAM lever | 1 |
| 8 | HW776 | Spring, push-button | 1 |
| 9 | 7060A4057 | Lever, CAM | 1 |
| 10 | 7060A4082 | Zoom field angle label | 1 |
| 11 | 7060A4054 | Light baffle | 1 |
| 12 | 7060A4058 | Gear, spur | 1 |
| 13 | HW777 | Wash spring | 1 |
| 14 | 7060A4081 | S4 Zoom angle label, 15-30 | 1 |
| 15 | HW5224 | Screw, 1/4-20 x 1-1/4, PHMS | 1 |
| 16 | HW8227 | Retainer, 1/4 turn stud | 1 |
| 17 | 7060A3114 | Latch bracket | 1 |
| 18 | HW8225 | Fastener, bail style | 1 |
| 19 | See below | Gel frame endcap assembly | 1 |
| 20 | HW5217 | Screw, 1/4-14 x 1, OHSL | 1 |

## 15°- 30° Gel frame endcap assembly

| Reference Number | Part Number | Description | Quantity Required |
|---|---|---|---|
| 20 | HW5217 | Screw, 1/4-14 x 1, OHSL | 4 |
| 21 | 7060A3111 | Endcap, gel frame, black | 1 |
| 22 | 7060A3100 | Gel clip | 1 |
| 23 | HW750 | Spring retainer | 1 |
| 24 | HW8226 | Receptacle, 1/4 turn stud | 1 |
| 25 | 7060A3097 | Plate, gel clip retainer | 1 |
| 26 | HW3185 | Screw, 8-32 x 3/8, PHPH, Taptite | 1 |

## 15°- 30° Front lens assembly

| Reference Number | Part Number | Description | Quantity Required |
|---|---|---|---|
| 27 | 7060A4046 | Front lens holder | 1 |
| 28 | 7060A4050 | Front gear rack | 1 |
| 29 | HW3118 | Washer, flat #8, black | 1 |
| 30 | HW3114 | Screw, 8-32 x 2, PHST, plastic | 1 |
| 31 | 7060A4067 | Front lens, glass | 1 |

## 15°- 30° Rear lens assembly

| Reference Number | Part Number | Description | Quantity Required |
|---|---|---|---|
| 32 | HW4117 | Washer, flat, teflon | 2 |
| 33 | HW4112 | Screw, #10-14 x 5/8, plastic | 2 |
| 34 | HW3118 | Washer, flat #8, black | 1 |
| 35 | HW3114 | Screw, 8-32 x 2, PHST, plastic | 1 |
| 36 | 7060A4051 | Rear gear rack | 1 |
| 37 | 7060A4068 | Rear lens glass | 1 |
| 38 | 7060A4048 | Rear lens holder | 1 |

# 25°- 50° Lens Tube

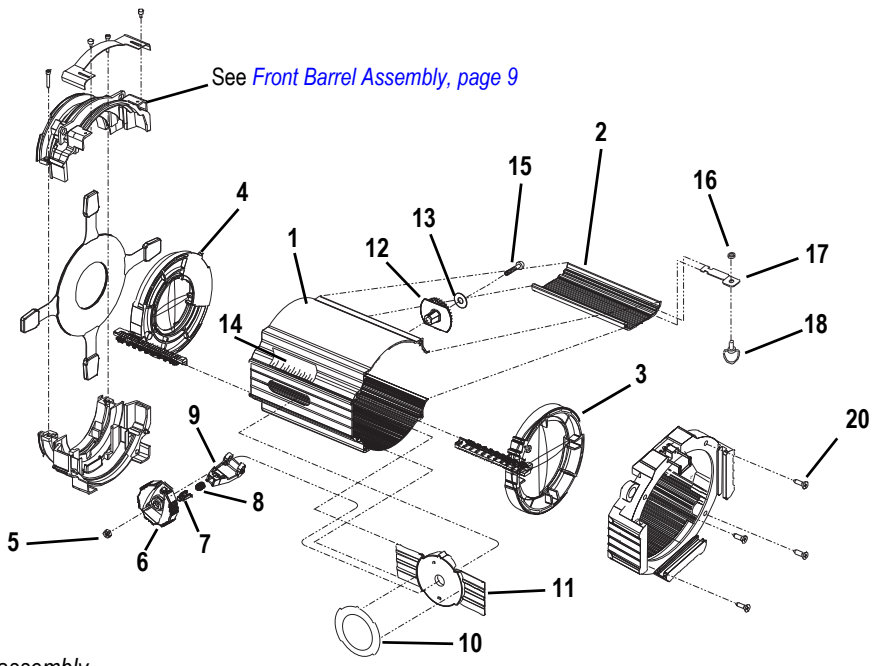


*25°-50° lens tube assembly*

**Figure 16**

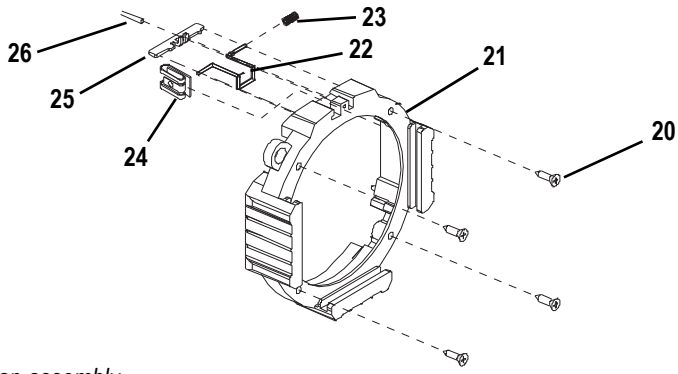


*25°-50° Gel frame endcap assembly*

**Figure 17**

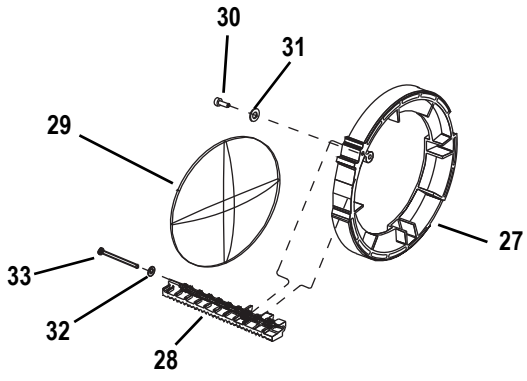


*25°-50° Front lens assembly*

**Figure 18**

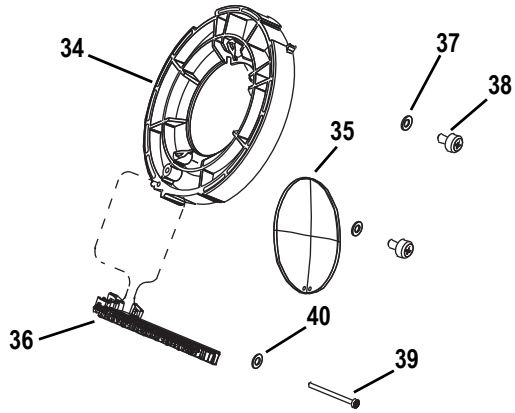


*25°-50° Rear lens assembly*

**Figure 19**

## 25°-50° lens tube assembly

| Reference Number | Part Number | Description | Quantity Required |
|---|---|---|---|
| 1 | 7060A2032 | 25°-50° lens tube | 1 |
| 2 | 7060A3139-02 | Extrusion door | 1 |
| 3 | See below | Front lens assembly | 1 |
| 4 | See below | Rear lens assembly | 1 |
| 5 | HW5218 | Nut, 1/4-20 metal lock Lowpro | 1 |
| 6 | 7060A4056 | Dial adjustment | 1 |
| 7 | 7060A4066 | Button, push, CAM lever | 1 |
| 8 | HW776 | Spring, push-button | 1 |
| 9 | 7060A4057 | Lever, CAM | 1 |
| 10 | 7060A4084 | Zoom field angle label | 1 |
| 11 | 7060A4055 | Light baffle | 1 |
| 12 | 7060A4058 | Gear, spur | 1 |
| 13 | HW777 | Wash spring | 1 |
| 14 | 7060A4080 | S4 Zoom angle label, 15-30 | 1 |
| 15 | HW5224 | Screw, 1/4-20 x 1-1/4, PHMS | 1 |
| 16 | HW8227 | Retainer, 1/4 turn stud | 1 |
| 17 | 7060A3114 | Latch bracket | 1 |
| 18 | HW8225 | Fastener, bail style | 1 |
| 19 | See below | Gel frame endcap assembly | 1 |
| 20 | HW5217 | Screw, 1/4-14 x 1, OHSL | 1 |

## 25°- 50° Gel frame endcap assembly

| Reference Number | Part Number | Description | Quantity Required |
|---|---|---|---|
| 20 | HW5217 | Screw, 1/4-14 x 1, OHSL | 4 |
| 21 | 7060A3111 | Endcap, gel frame, black | 1 |
| 22 | 7060A3100 | Gel clip | 1 |
| 23 | HW750 | Spring retainer | 1 |
| 24 | HW8226 | Receptacle, 1/4 turn stud | 1 |
| 25 | 7060A3097 | Plate, gel clip retainer | 1 |
| 26 | HW3185 | Screw, 8-32 x 3/8, PHPH, Taptite | 1 |

## 25°- 50° Front lens assembly

| Reference Number | Part Number | Description | Quantity Required |
|---|---|---|---|
| 27 | 7060A4047 | Front lens holder | 1 |
| 28 | 7060A4052 | Front gear rack | 1 |
| 29 | 7060A4069 | Front lens, glass | 1 |
| 30 | HW4112 | Screw, #10-10 x 5/8, plastic | 1 |
| 31 | HW4117 | Washer, flat, teflon | 1 |
| 32 | HW3118 | Washer, flat #8, zinc | 1 |
| 33 | HW3114 | Screw, 8-32, PHST, plastic | 1 |

## 25°- 50° Rear lens assembly

| Reference Number | Part Number | Description | Quantity Required |
|---|---|---|---|
| 34 | 7060A4048 | Rear lens holder | 1 |
| 35 | 7060A4070 | Rear lens glass | 1 |
| 36 | 7060A4053 | Rear gear rack | 1 |
| 37 | HW4117 | Washer, flat, teflon | 2 |
| 38 | HW4112 | Screw, #10 - 10 x 5/8, plastic | 2 |
| 39 | HW3116 | Screw, 8-10 x 1-1/2 | 1 |
| 40 | HW3118 | Washer, flat #8, zinc | 1 |

## Assemble lens tube (15°-30° and 25°-50°)

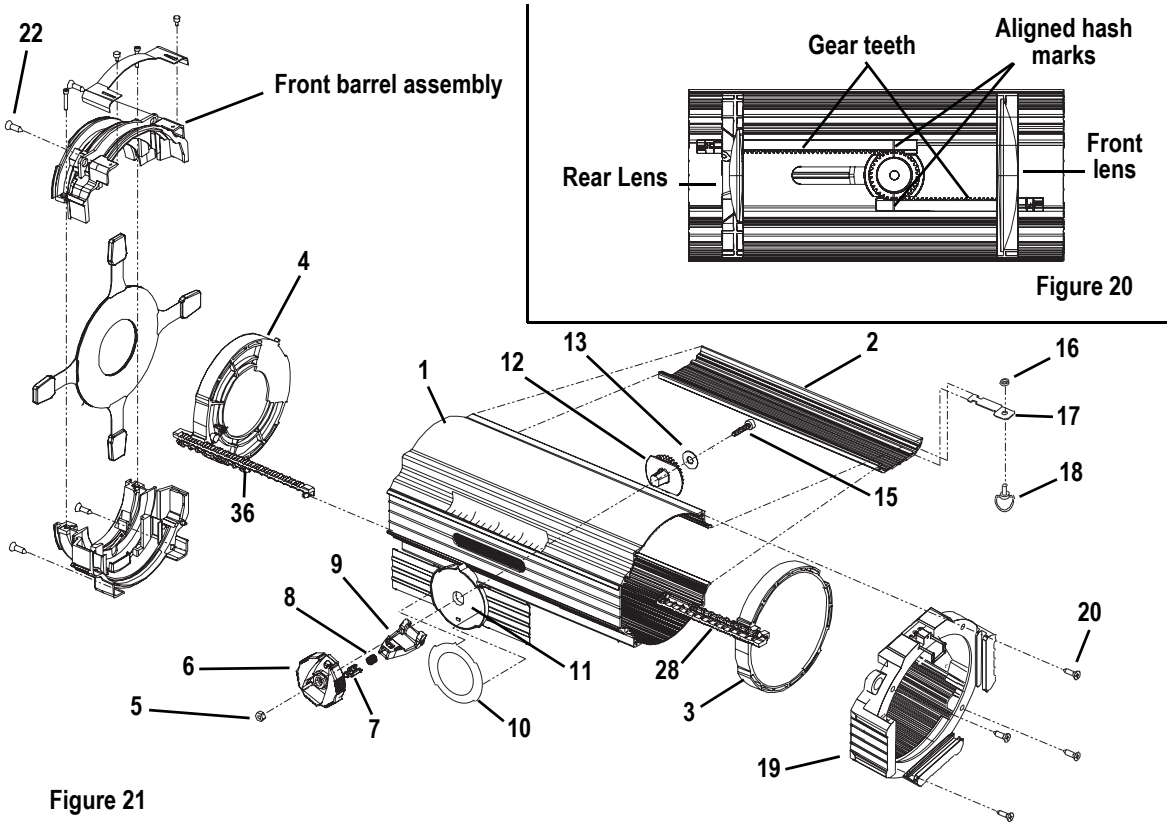


Figure 20

Figure 21

Tools Required:

- #2 Phillips head screwdriver

Step 1: Slide the front lens assembly (3) and rear lens assembly (4) into the lens tube (1) as shown in *Figure 20*.

Step 2: Position the lens assembly gear teeth as shown in *Figure 20*.

Step 3: From inside the unit, place the gear spur (12) between the lens assemblies. Make sure the vertical hash marks on the gear spur line up with the hash marks on both the front and rear gear teeth. See *Figure 20*.

Step 4: Slide the light baffle (11) into the opening of the lens tube. See *Figure 21*.

Step 5: From inside the unit, pass the screw (15) through the washer (13), the hole on the gear spur (12) and the light baffle (11).

Step 6: On the outside of the unit, place the adjustment dial (6) over the screw end (15) and secure with the metal nut (5).

Step 7: Place the front barrel assembly onto the rear of the lens tube and secure with four screws (22).

Step 8: With the extrusion door open, place the gel cap (19) on the front of the unit and secure with four screws (20).

Step 9: Once the gel cap is in place, close the extrusion door and turn the fastener (18) one-quarter turn clockwise to secure the baffle in place.

## Cleaning glass lens

**WARNING:** ***Do not use ammonia-based or other harsh commercial cleaners. Clean lens only as directed.***

***Commercially available glass cleaning agents should be avoided as they may contain ammonia, other harsh chemical detergents or abrasive agents. These cleaners may damage the glass surface and the Anti-Reflective coatings. Do not immerse or soak the glass in any cleaning solution.***

Remove dust with a blast of oil-free air or wipe with a clean, lint-free cloth. Isopropyl alcohol, distilled water or a 50%-50% mixture of each can be used to clean the glass surface.

**Corporate Headquarters** ■ 3031 Pleasant View Road, P.O. Box 620979, Middleton, Wisconsin 53562-0979 USA ■ Tel +608 831 4116 ■ Fax +608 836 1736
**London, UK** ■ Unit 26-28, Victoria Industrial Estate, Victoria Road, London W3 6UU, UK ■ Tel +44 (0)20 8896 1000 ■ Fax +44 (0)20 8896 2000
**Rome, IT** ■ Via Ennio Quirino Visconti, 11, 00193 Rome, Italy ■ Tel +39 (06) 32 111 683 ■ Fax +39 (06) 32 656 990
**Holzkirchen, DE** ■ Ohmstrasse 3, 83607 Holzkirchen, Germany ■ Tel +49 (80 24) 47 00-0 ■ Fax +49 (80 24) 47 00-3 00
**Hong Kong** ■ Rm 1801, 18/F, Tower 1 Phase 1, Enterprise Square, 9 Sheung Yuet Road, Kowloon Bay, Kowloon, Hong Kong ■ Tel +852 2799 1220 ■ Fax +852 2799 9325
**Service:** (Americas) service@etcconnect.com ■ (UK) service@etceurope.com ■ (DE) techserv-hoki@etcconnect.com ■ (Asia) service@etcasia.com
**Web:** www.etcconnect.com ■ Copyright © 2007 ETC. All Rights Reserved. ■ Product information and specifications subject to change.
**7060M2550-06.01** ■ Rev A ■ Released 08/2007