SW ISOMETRIC VIEW

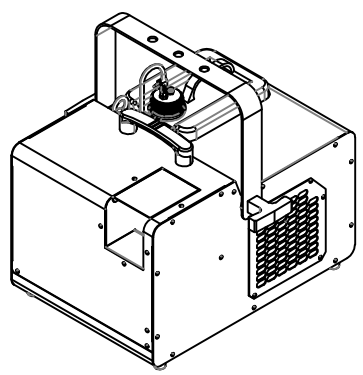

TOP VIEW

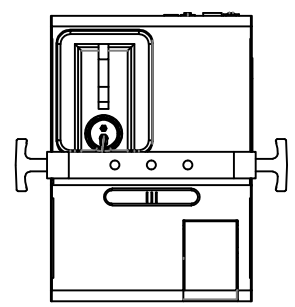

SE ISOMETRIC VIEW

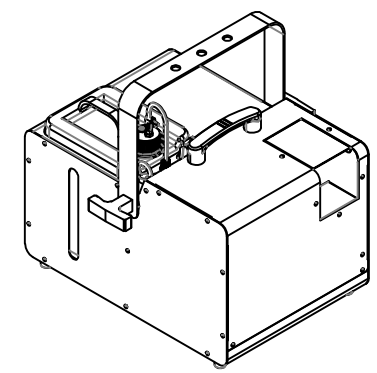

FOOTPRINT TEMPLATE

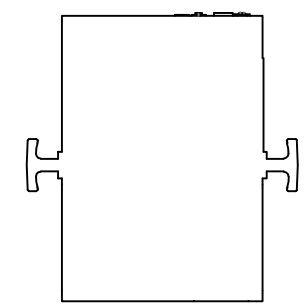

LEFT SIDE VIEW

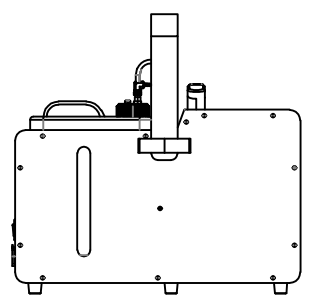

FRONT VIEW

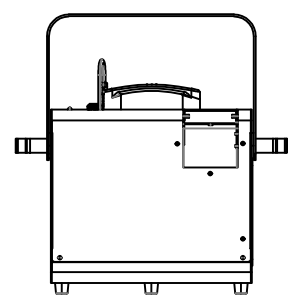

RIGHT SIDE VIEW

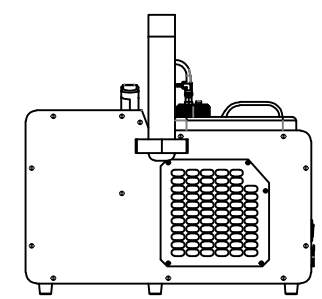

REAR VIEW

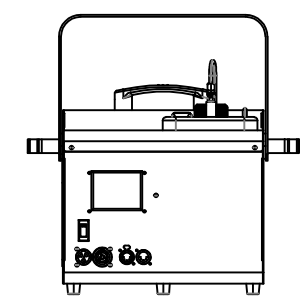

NW ISOMETRIC VIEW

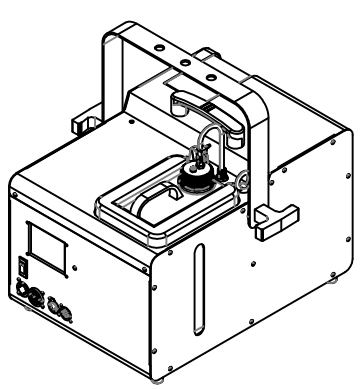

BOTTOM VIEW

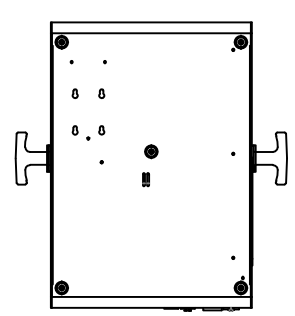

NE ISOMETRIC VIEW

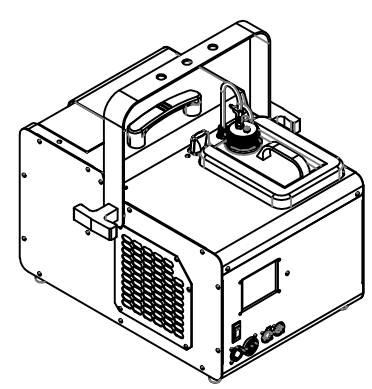

HIGH END SYSTEMS

an ETC. Company

HIGH END SYSTEMS

2105 Gracy Farms Ln
Austin, Texas 78758
Tel +1 512 836 2242
Fax +1 512 837 5290
www.highend.com

UNLESS OTHERWISE SPECIFIED ALL DIMENSIONS ARE IN INCHES.

ORIGINAL FILE:
HAZER HQ100 VIEWS.DWG

CONTRACT WITH:

REPRESENTATIVE:

PROJECT MANAGER:

APPLICATIONS ENGINEER:

DRAWING TITLE:
HQ-100
HAZER

PHYSICAL

BY	DATE	SCALE
AJB	12/02/20	FULL

JOB:

LOCATION:

JOB NUMBER:

PART NUMBER:
150A1001