ETC Setup Guide

Emergency Bypass Detection Kit

Overview

The Emergency Bypass Detection Kit (EBDK) senses disruption of the connected normal power service and generates a dry contact closure, triggering the Panic/UL 924 input of connected ETC dimming and switching products.

The EBDK is designed for use with the ETC DMX Emergency Bypass Controller or with Sensor®3, SmartPack®, Echo® Relay Panel, Echo® Relay Panel Feedthrough, Sensor® IQ Breaker Panel, and Unison® DRd power control systems.

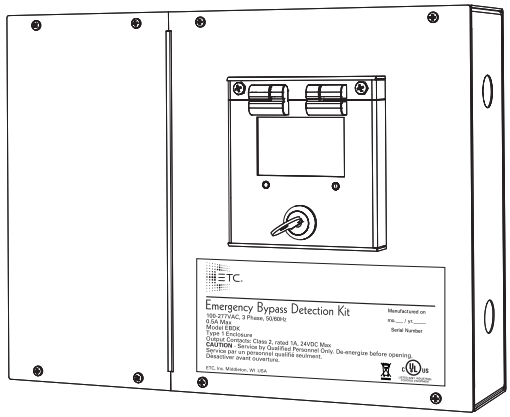

Product Specification

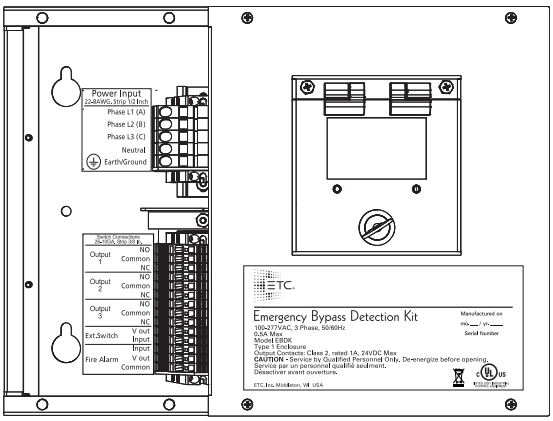

- Compatible with 100–277 VAC (single-phase or three-phase) power systems
- Includes three integral 5A circuit breakers for phase protection and test function
- Circuit breakers are protected with a locking cover
- Includes both normally open (NO) and normally closed (NC) switch connections for three outputs
- Includes a normally closed (NC) external switch connection for an EBDK Reset Switch (EBDK-SWITCH)
- Includes a normally closed fire alarm switch connection

Related Products

Model	Part Number	Description	Notes
EBDK-TAP	7180A1202	Emergency Bypass DRd Tap Kit	Install in a normal powered DRd enclosure to provide normal power sense feed to the EBDK. Connect the contact switch outputs to a normal/emergency fed DRd enclosure in the system for panic triggering when normal power failure is sensed.
SR3-TAP	7141K1002	Emergency Bypass Sensor3 Tap Kit	Install in a normal powered Sensor3 enclosure to provide normal power sense feed to the EBDK. Connect the contact switch outputs to a normal/emergency fed Sensor3 enclosure in the system for panic triggering when normal power failure is sensed.
EBDK-SWITCH	7180A1201	Emergency Bypass Detection Reset Switch	Maintains bypass/emergency state until a user manually resets the system by pressing the reset switch.
DMX-BYPASS	7180A1221 7180A1226	DMX Emergency Bypass Controller	Allows DMX512 controlled fixtures, such as LEDs, to operate as normal/emergency fixtures by bypassing a single universe of DMX512 directly to the connected fixtures. Available in single output (7180A1221) or 6-output (7180A1226) models.

Corporate Headquarters ■ Middleton, WI, USA ■ Tel +608 831 4116 ■ Service: (Americas) service@etcconnect.com
London, UK ■ Tel +44 (0)20 8896 1000 ■ Service: (UK) service@etceurope.com
Rome, IT ■ Tel +39 (06) 32 111 683 ■ Service: (UK) service@etceurope.com
Holzkirchen, DE ■ Tel +49 (80 24) 47 00-0 ■ Service: (DE) techserv-hoki@etcconnect.com
Hong Kong ■ Tel +852 2799 1220 ■ Service: (Asia) service@etcasia.com
Web: etcconnect.com ■
7183M2270 ■ Rev D ■ Released 2017-10

ETC Setup Guide

Emergency Bypass Detection Kit

Installation

Install the EBDK

1: Remove both front covers from the EBDK in order to access the mounting keyholes.

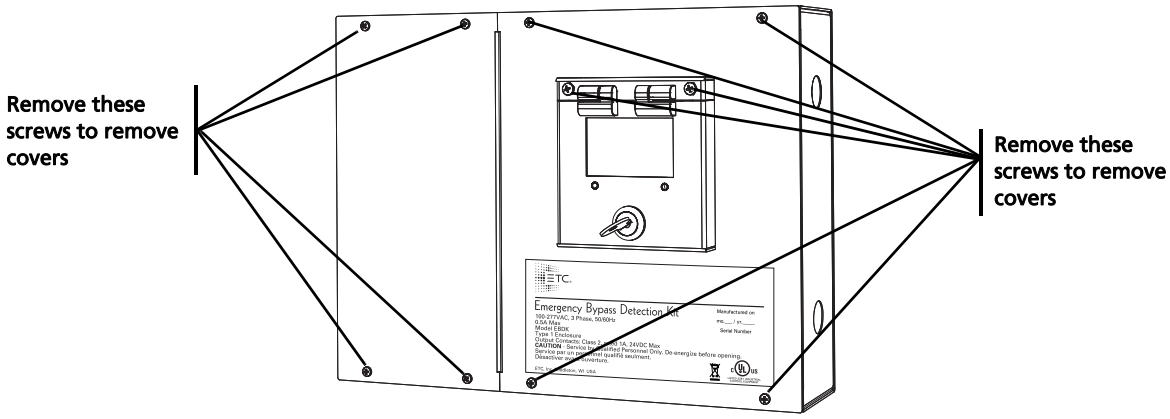

2: Use the measurements provided in the image at right for mounting keyhole locations.

3: Secure the EBDK enclosure to the wall using four 1/4"-diameter fasteners (mounting hardware not provided). In addition, use a single fastener (hardware not included) to secure the box to the wall through the single round hole in the rear panel (see image at right).

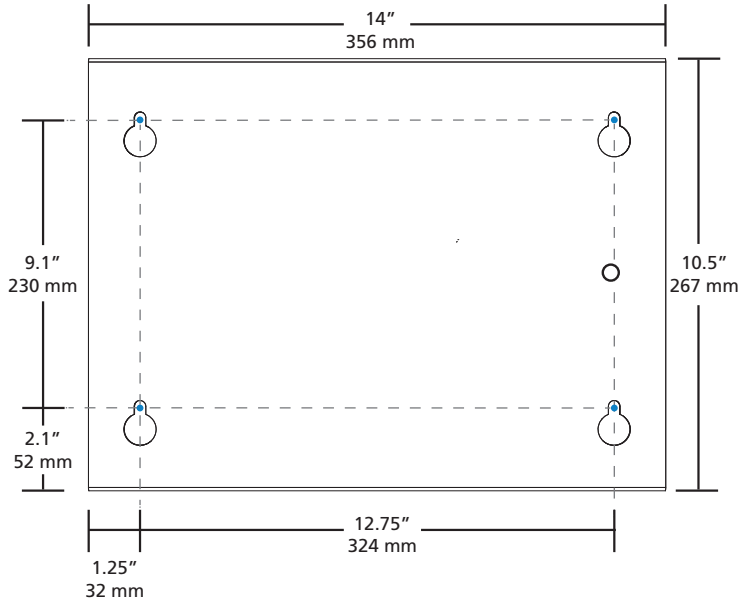

Note: *Install the EBDK enclosure on the wall in an electrical closet or in a room near the ETC bypass, dimming, or switching product.*

Route Conduit and Wiring

Conduit knockouts are provided in the top, bottom, and each side of the enclosure for installation convenience, although all connections are made to the terminal block on the left side of the enclosure. AC input terminals accept 22–8 AWG (.34 mm^2–10 mm^2) wire. Switch terminals accept 16 AWG (1.5 mm^2) wire.

Note: *Power and control wires must be run in separate conduit. Follow all local code restrictions.*

ETC Setup Guide

Emergency Bypass Detection Kit

Connect Sense Wiring

Input power wiring may be 100–277 VAC, single or three phase. Wire termination is dependent on one of two typical installation types, normal power sensed from a normal powered breaker panel (supplied by others) or normal power sensed from a normal powered DRd or Sensor3 enclosure.

Sensing Normal Power from a Breaker Panel

Systems designed to sense normal power from a normal powered breaker panel (supplied by others) require one 3-pole circuit breaker (rated from 5A to 20A, also supplied by others). This system design is typical of most ETC dimming and switching products requiring the EBDK. The illustration below shows a system where the EBDK senses normal power from a 3-pole circuit breaker and transmits a control bypass signal to an ETC DRd dimming rack.

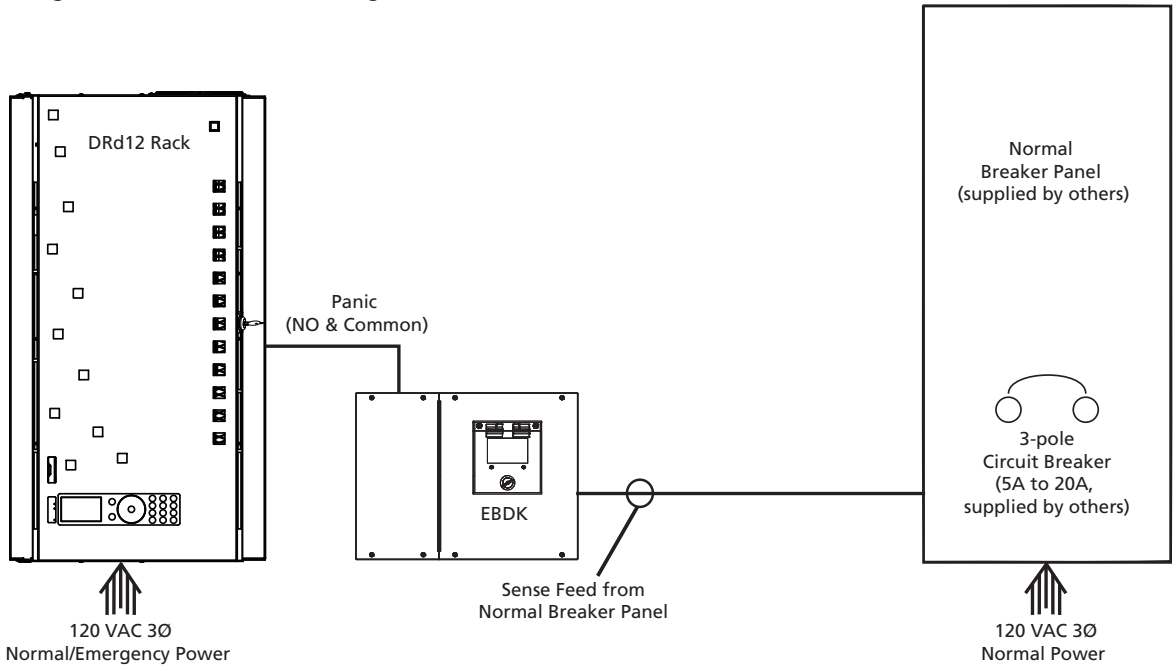

1: Pull input power wires through conduit from the normal powered breaker panel to one 3-pole circuit breaker (rated from 5A to 20A, supplied by others) to the EBDK enclosure.

2: Strip the power wires back .52" (13 mm).

3: Terminate the sense power wires to the EBDK power input terminal block.

   a: Open the terminal by inserting a small jeweler's screwdriver into the spring terminal.

   b: Insert the wire into the wire input terminal and remove the screwdriver to close the terminal onto the wire.

   c: Pull back gently on the wire to be certain it is secure in the terminal.

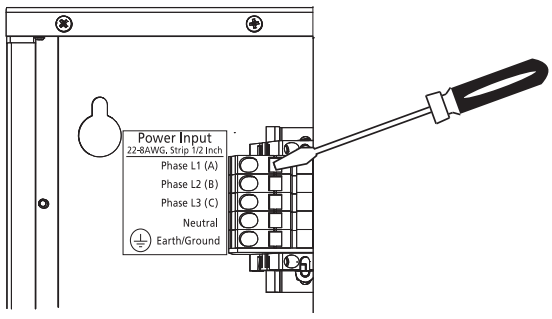

Sensing Normal Power from a DRd Enclosure

Systems designed to sense normal power from a normal powered DRd or Sensor3 enclosure must utilize an emergency bypass tap kit (EBDK-TAP or SR3-TAP). The illustration below shows the setup for a DRd.

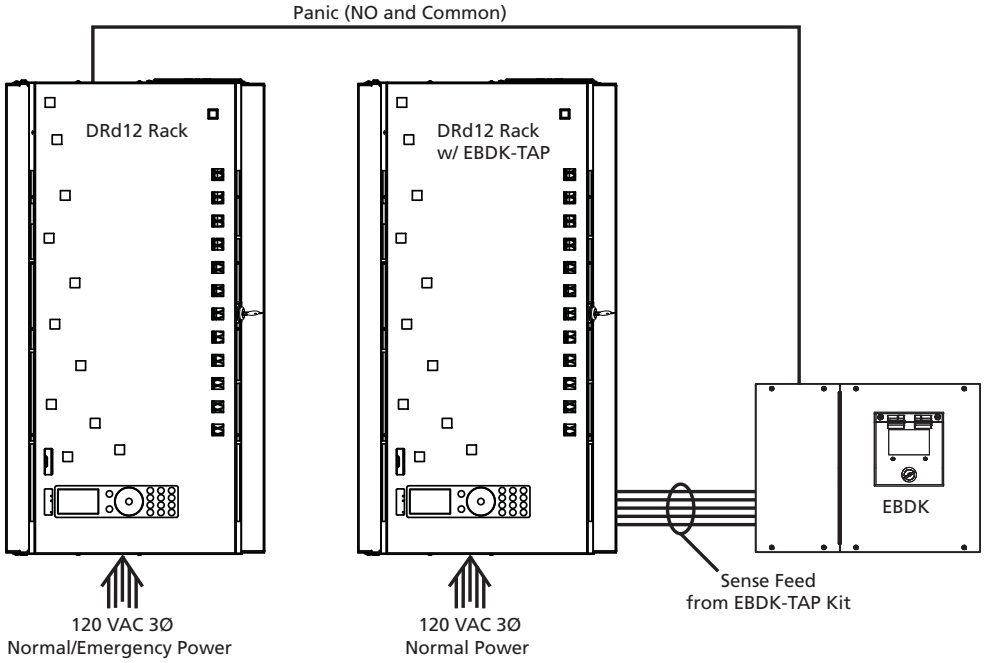

1: Install the emergency bypass tap kit (EBDK-TAP) into the enclosure.
   - **DRd enclosure:** Follow the installation instructions in the *Emergency Bypass DRd Tap Kit Setup Guide* to install the EBDK-TAP.
   - **Sensor3 enclosure:** Follow the installation instructions in the *Sensor Tap Kit Setup Guide* to install the SR3-TAP.

2: Pull the power input sense wires through conduit from the DRd or Sensor enclosure to the EBDK enclosure.

3: Strip the power wires back .52" (13 mm).

4: Terminate the sense power wires to the EBDK power input terminal block.
   - a: Open the terminal by inserting a small jeweler's screwdriver into the spring terminal.
   - b: Insert the wire into the wire input terminal and remove the screwdriver to close the terminal onto the wire.
   - c: Pull back on the wire to be sure it is secure in the terminal and check there are no wire strands outside the terminal.

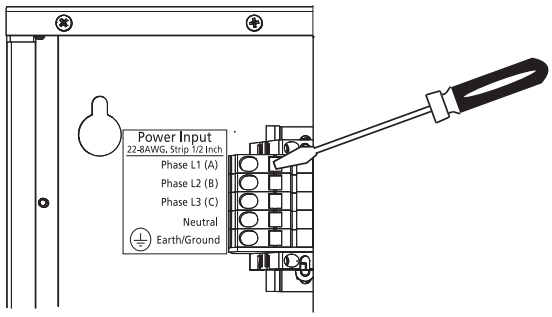

Connect Panic Wires

Switch connections may include panic contact closure inputs to a variety of products, including DMX Emergency Bypass Controllers and Sensor3, Sensor IQ, SmartPack, Echo Relay Panel, Echo Relay Panel Feedthrough, and Unison DRd power control systems. Additionally, dry contact closure termination is available for an EBDK Reset Switch (EBDK-SWITCH) connection and a fire alarm connection.

Note: *Up to two EBDK Reset Switches (EBDK-SWITCH) may be wired in series within a maximum distance of 500' (152m) between the EBDK and the last EBDK-SWITCH in the line.*

1: Pull panic wires (two each 26–10 AWG /.34 mm^2–10 mm^2) through conduit between the ETC product fed with normal/emergency power and the EBDK enclosure.

2: Connect the panic wires to the panic input of the ETC product. See the following sections for instructions specific to each product.

Connect Panic Wires to a DRd Enclosure

Connect the panic wires to the 2-pin female removable screw connector labeled **Panic** on the DRd enclosure right I/O board using the following steps.

1: Strip 1/4" (6 mm) of insulation from the ends of the two panic wires.

2: Remove the 2-position female pluggable connector (labeled **Panic**) from the DRd enclosure right I/O board.

3: Twist the panic wires together as close to the connector as possible.

4: Insert the two wires into the terminals of the connector until the insulation is even with the housing of the terminal opening.

5: Tighten the screw firmly onto each wire.

6: Pull back on the wire to be sure it is secure and check there are no wire strands outside the terminal block.

7: Connect panic wires to the EBDK. See *Connect Panic Wires to the EBDK* on *page 7*.

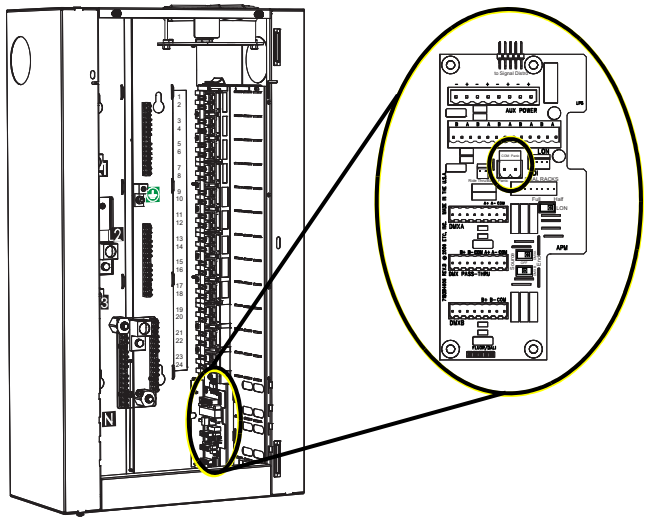

Connect Panic Wires to a SmartPack

Locate the 6-position pluggable screw terminal labeled **Panic/LON** on the I/O board. This connector is shared termination for both emergency (panic) and SmartLink control. Connect the panic wires using the following steps.

1: Strip 1/4" (6 mm) of insulation from the ends of the two panic wires.

2: Remove the 6-position pluggable connector from the I/O board.

3: Twist the panic wires together as close to the connector as possible.

4: Insert the two wires into pins 5 and 6 of the connector until the insulation is even with the housing of the terminal opening.

5: Tighten the screw firmly onto each wire.

6: Pull back on the wire to be sure it is secure and check there are no wire strands outside the terminal block.

7: Connect panic wires to the EBDK. See *Connect Panic Wires to the EBDK* on *page 7*.

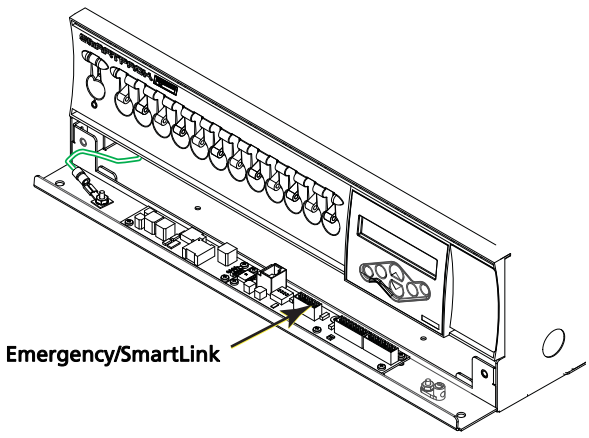

Connect Panic Wires to an Echo Relay Panel, Echo Relay Feedthrough Panel, or Sensor IQ Breaker Panel

Connect the panic wires to the 2-pin Emergency Input connector on the termination I/O board using the following steps. The illustration below shows an Echo Relay Panel.

1: Strip 3/16" (5 mm) of insulation from the ends of each wire.

2: Remove the 2-pin Emergency Input connector from J2 on the termination I/O board.

3: Loosen the terminal screws.

4: While maintaining the wire twist as close to the connection as possible, insert each wire into the terminals on the connector.

5: Tighten the screws firmly to secure the wires into the connector.

6: Replace the connector to the termination board.

7: Set the Emergency switch, S1 on the termination I/O board, to indicate the Emergency Input contact closure type:

- Normally Open Closure (NO)
- Disabled (Dis)
- Normally Closed Closure (NC)

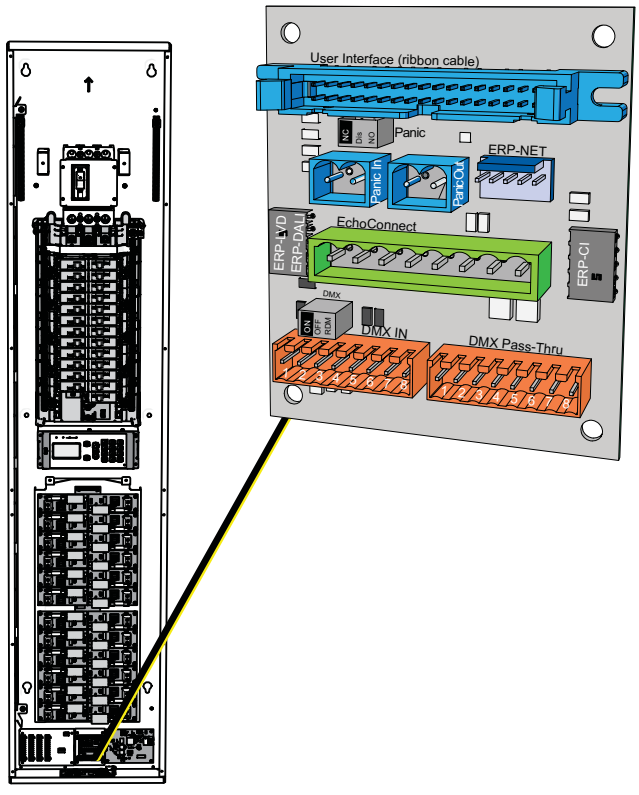

ETC Setup Guide

Emergency Bypass Detection Kit

Connect Panic Wires to a Sensor3 dimmer rack

Locate the 8-position screw connector labeled **Emergency Contact** on the CEM3 or backplane. This connector is not removable; therefore, connections are made directly to the backplane.

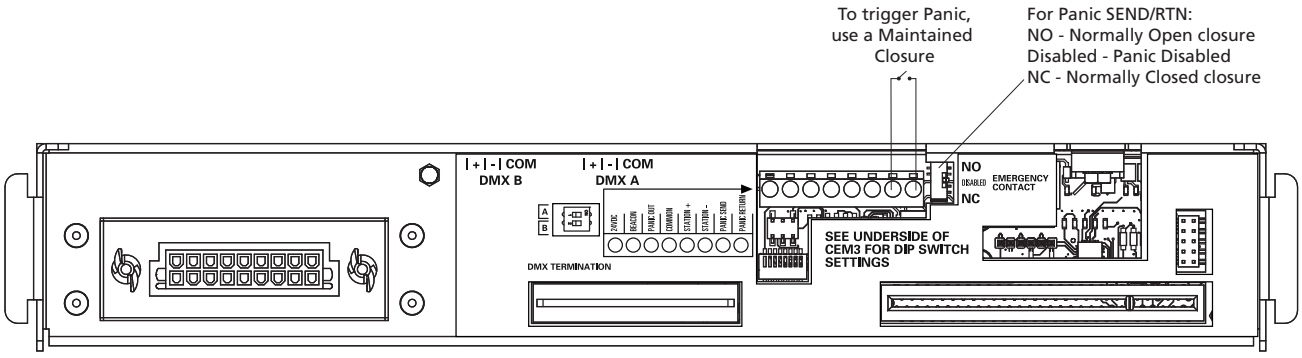

1: Strip 1/4" (6 mm) of insulation from the ends of the two panic wires.

2: Twist the panic wires together as close to the connector as possible.

3: Insert the two panic input wires into the **Panic Send** and **Panic Return** terminals of the connector until the insulation is even with the housing at the opening.

4: Tighten the screw firmly onto each wire.

5: Pull back on the wire to be sure it is secure and check there are no wire strands outside the terminal block.

6: Connect panic wires to the EBDK. See *Connect Panic Wires to the EBDK* on *page 7*.

Connect Panic Wires to DMX Emergency Bypass Controller

See the *DMX Emergency Bypass Controller Installation Guide* for connection instructions. Then connect panic wires to the EBDK. See *Connect Panic Wires to the EBDK* on *page 7*.

Connect Panic Wires to the EBDK

1: Strip .39" (10 mm) from the ends of the panic wires.

Note: *Be sure to properly configure the panic/emergency inputs of ETC dimming and switching products to be consistent with switch connection terminations. Defaults for all these products are the use of normally open (NO) and maintained switch inputs. When integrating an EBDK Reset Switch (EBDK-SWITCH) into the system, follow the installation instructions detailed in the EBDK Reset Switch Setup Guide.*

2: Connect the EBDK end of the panic wires to one of the output switch connection points. ETC dimming and switching products may be configured for normally open or a normally closed contact input.

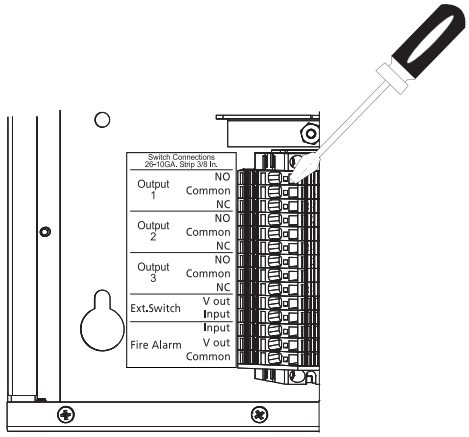

a: Open the terminal by inserting a small jeweler's screwdriver into the spring terminal.

b: Insert the wire into the wire input terminal and remove the screwdriver to close the terminal onto the wire.

c: Pull back on the wire to be sure it is secure in the terminal and check there are no wire strands outside the terminal.

- For a normally open contact input, connect the panic wires to the **NO** and **Common** terminals.
- For a normally closed contact input, connect the panic wires to the **NC** and **Common** terminals.

3: If connecting a normally closed (NC) fire alarm, pull the contact wires (two each 26–10 AWG /.34 mm^2–10 mm^2) through conduit between the fire alarm and the EBDK enclosure.

4: Connect the EBDK end of the contact wires to the switch connection labeled **Fire Alarm**. Use the same wire insertion method explained in step 3.

Note: *By default, ETC supplies a jumper installed between the fire alarm Input and V out terminals to maintain a normally closed circuit. This jumper should be removed only if you are terminating fire alarm contact wires.*

- If the fire alarm is sending a 12V signal to the EBDK, land the contact wires on the terminals labeled **Input** and **Common**. Pull the jumper and discard.
- If the fire alarm is not sending a 12V signal to the EBDK, land the contact wires on the terminals labeled **Input** and **V out**. Pull the jumper and discard.

Final Installation and Test

1: Replace the covers on the EBDK.

Note: *Make sure the EBDK circuit breakers are in the On position before completing a system test.*

2: Complete the installation, final installation, and system checkout for the related ETC products, the fire alarm input, and any connected external switches.

3: Test the emergency operation of the EBDK by turning the built-in circuit breakers Off. If the system is installed properly all connected UL 924 Emergency products will receive a contact input which places the product in emergency mode, playing the recorded panic look.